namco® America, Inc.

TM

KIT 2

INSTALLATION AND OPERATION MANUAL

Important

Read PRECAUTIONS and INSTALLATION Sections before operating game

FCC Notice

Note: This equipment has been tested and found to comply with the limits for a Class A digital device, pursuant to Part 15 of the FCC Rules. These limits are designed to provide reasonable protection against harmful interference when the equipment is operating in a commercial environment. This equipment uses, and can radiate radio frequency energy and, if not installed and used in accordance with the instruction manual, may cause harmful interference to radio communications. Operation of this equipment in a residential area is likely to cause harmful interference in which case the user will be required to correct the interference at his own expense.

Copyright 1996 NAMCO AMERICA INC. - All rights reserved

No part of this publication may be reproduced by any mechanical photographic, or electronic process, or in the form of a phonographic recording, nor may it be stored in a retrieval system, transmitted, or otherwise copied for public or private use, without permission from NAMCO AMERICA INC.

Table of Contents

1.0 SPECIFICATIONS ---- 1
1.1 Conversion Game Specifications ---- 1
1.2 Kit Specifications ---- 1
1.3 Game Conversion Overview ---- 2
2.0 INTRODUCTION ---- 3
2.1 Game Play ---- 3
3.0 INSTALLATION ---- 3
3.1 Precautions ---- 3
3.2 Cabinet Preparation ---- 4
3.3 Game Installation ---- 4
3.4 Control Panel ---- 7
3.5 Cabinet Graphics ---- 7
3.6 Power-Up ---- 7
4.0 Set-Up and Test ---- 8
4.1 Gun Alignment and Initialization ---- 8
4.2 Test Mode ---- 12
4.2.1 SwitchTests ---- 13
4.2.2 Gun Output Tests ---- 14
4.2.3 Game Options ---- 16
4.2.4 Coin Options ---- 17
4.2.5 Color Test ---- 19
4.2.6 Convergence Test ---- 19
4.2.7 Sound Test ---- 20
5.0 Troubleshooting and Maintenance ---- 21
5.1 Troubleshooting ---- 21
5.2 PCB Service ---- 22
5.3 Gun Removal and Disassembly ---- 23
5.3.1 Opening the Gun ---- 23
5.3.2 Replacing the Gun Solenoid ---- 24
5.3.3 Trigger Switch Replacement ---- 25
APPENDIX A: PARTS LIST AND WIRING DIAGRAMS

1.0 SPECIFICATIONS

1.1 Conversion Game Specifications

Power Supply: (in the game to be converted)	150W +5VDC (16A), +12VDC (6A)
Monitor:	RGB color; monitor may be either vertically mounted, or horizontally mounted using a 45 degree reflector mirror.

1.2 Kit 2 Specifications

Note: The KIT 2 specifications and parts list apply to the domestic (USA) kit version. International kits may not include all of the parts shown.

Assy. Part No. PB01-03156-00

Game PCB	1 ea.
Guns (2)	1 ea. pink and blue.
Gun Power Supply	1 ea. 100W, +24VDC.
Holster Assy	2 ea., black.
Tether Assy	2 ea., with chain.
Wire Harnesses	6 ea.
Graphics	Marquee, control panel, left and right cabinet sides, and instruction panel.
Pushbutton Switches (2)	Illuminated, 1 ea. red and blue.

Note: Kit specifications and contents are subject to change without prior notice. Modification and/or alteration of the POINT BLANK™ PCB or guns with parts not supplied by* NAMCO *may void the warranty.

REMOVAL OF SERIAL NUMBERS AND/OR BARCODE LABELS FROM PRODUCT OR COMPONENTS WILL VOID THE WARRANTY.

1.3 Game Conversion Overview

This manual provides installation instructions for Point Blank Kits. The cabinet to be converted must be equipped with a 5 amp circuit breaker, or DPST ON/OFF toggle switch with a 5 amp fuse in the hot (line) side. Recommended system wiring is shown on the Overall Harness diagram in the back of this manual. This kit provides new wire harnesses for:

- Connecting the new +24VDC power supply to the (fused) 120VAC 60 Hz source.
- Connecting the guns and pushbuttons to the new PCB Assy.
- Connecting the cabinet's +5/+12VDC power supply to the new PCB Assy.
- Connecting the RGB video output to the monitor.
- Connecting the (user supplied) audio volume pots, speakers, and service, coin, and test switches to the POINT BLANK™ PCB Assy.

Caution: If the game cabinet is equipped with an isolation transformer to provide isolated AC voltage to the video monitor, do not attempt to use the isolated AC as an input source for the new +24VDC power supply, or damage to the game PCB may result.

2.0 INTRODUCTION

2.1 Game Play

POINT BLANK™ is a shooting game for all ages featuring one-player skill contests and two-player competition. The game features an innovative gun with a"blowback" mechanism to simulate the recoil of a real gun. It is six times more accurate than guns currently being used on other games. POINT BLANK™ provides the enjoyment of a gun game with a nonviolent theme.

There are four skill levels available to the player at the start of the game. These are: Training, Beginner, Expert, and Very Hard. The player selects the desired level by shooting the appropriate box at the beginning of the game. If the player does not choose, the game defaults to the Training level. The Training level has four stages. Beginning, Expert, and Very Hard levels have sixteen stages each. The player earns a bonus stage after clearing eight stages.

POINT BLANK™ has two guns, one pink and one blue. Before each stage brief instructions tell the player about the stage ahead, and a"quota" is displayed. The player(s) must achieve or surpass this quota within a given time limit. If the quota is not met, one life is lost. In some stages, players share targets. In others, each player must shoot only targets corresponding to the color of the gun. In these games the player earns credit only for the correctly colored targets. Some stages have unlimited bullets, other stages have limited bullets. For every bomb and incorrect target shot, the player loses a life.

3.0 INSTALLATION

3.1 Precautions

1. Before installing any parts, turn the AC power OFF and unplug the game.

2. The game's video monitor chassis, when exposed, presents a HIGH VOLTAGE shock hazard. If it becomes necessary to work in the back of the game while the power is on, use extreme care to avoid touching the monitor.

3. Make sure that the main AC power hookup includes a safety ground, and that the main 120VAC line is fused at 5 amperes (max.)

4. Do not attempt to repair the game's PCB on-site. Always return the PCB Assy. as a complete set to your distributor for any repairs.

Note: Shipping damage may void the warranty. In case of shipping damage, contact your distributor and the transportation carrier immediately.

Before beginning the installation, verify that the kit contents match the enclosed parts list.

3.2 Cabinet Preparation

1. Remove the following:

   - Game PCB
   - Control Panel
   - Marquee
   - Decals
   - Existing Wire Harnesses, except:
     a) AC power to existing +5/+12VDC power supply
     b) Fluorescent fixture harness
     c) Monitor AC power harness (include isolation transformer, if used)
     d) Coin door harness
     e) Service panel harness

2. Clean and fill all blemishes and dents and paint the exterior of the cabinet as needed.

3.3 Game Installation

1. Verify that power has been removed from the game.

2. Install standoffs on both the Main PCB and Position PCB.

3. Connect the Main PCB to the Position PCB.

4. Install the PCB Assembly, *mounted vertically*, inside the cabinet.

5. Mount the +24VDC power supply to the bottom of the cabinet.

6. Connect the +24VDC power supply to the fused AC input power line, on the output side of the EMI filter (if used). [ref. dwg. PB50-03354-00]

7. Fit up the JAMMA kit harness in the cabinet. Connect the 9-pin Molex plug to the output of the +5/+12VDC power supply. [ref. PB50-03356-00]

8. Connect the 6-pin AMP plug to J1 of the Position PCB. Connect the YEL and BLK wires (terminated in ring lugs) to the the +24VDC and GND (pins 1 and 3, respectively) on the 24VDC power supply.

9. Connect the 9-pin AMP plug to J4 of the Position PCB. Connect the 48-pin and 56-pin JAMMA connectors to the Main PCB.

10. Connect the 15-pin AMP plug to J2 of the Position PCB. [ref. PB50-03358-00]. Connect the 2-pin Molex plug, J102, to the mating connector which is located on a short pigtail near J1 of the Position PCB.

11. Connect the 10-pin Molex single-row connector (RGB Video) to the input of the monitor chassis board. (If a different connector is required, wire it in accordance with the signal designations shown on the JAMMA drawing).

12. Connect the 1-pin Molex plug J100 to its mating connector tied to J4 of the Position PCB.

13. Connect the 15-pin Molex plug J30 (gun harness) [PB50-03356-00] to the mating connector shown on the Position Harness drawing [PB50-03358-00].

14. Wire up the cabinet speakers to the 4 wires shown in the upper right corner of the JAMMA Harness drawing.

15. Connect the 9-pin Molex plug J19 on the Service Panel Harness to its mate shown on the JAMMA Harness drawing. Wire up the 100 ohm volume pots, service and test switches as shown. [PB50-03359-00].

16. Locate the 4-pin Molex plug J27 [ref. PB50-03360-00, START HARNESS] for the player button switches. Connect pins 1,2, and 3 to the YEL, YEL/GRY, and BLK wires, respectively, tied to the 56-pin JAMMA connector.

17. Connect the PNK and BLK wires of the 2-pin Molex receptacle J21 to the normally-open contacts of the user-supplied coin switch.

18. If a coin counter is to be used, connect its +12VDC and RTN wires to the OR and GRY wires tied to the 56-pin JAMMA connector. (Pins 6 and 8, respectively).

19. Upon completion of this preliminary installation, there should remain 2 unterminated 6-pin connectors for the guns, 4 quick-disconnect terminals for the player button lights, and 4 terminals for the player button switches. Safely tie off any unused wires.

20. Install the FCC foil shield over the PCB assembly.

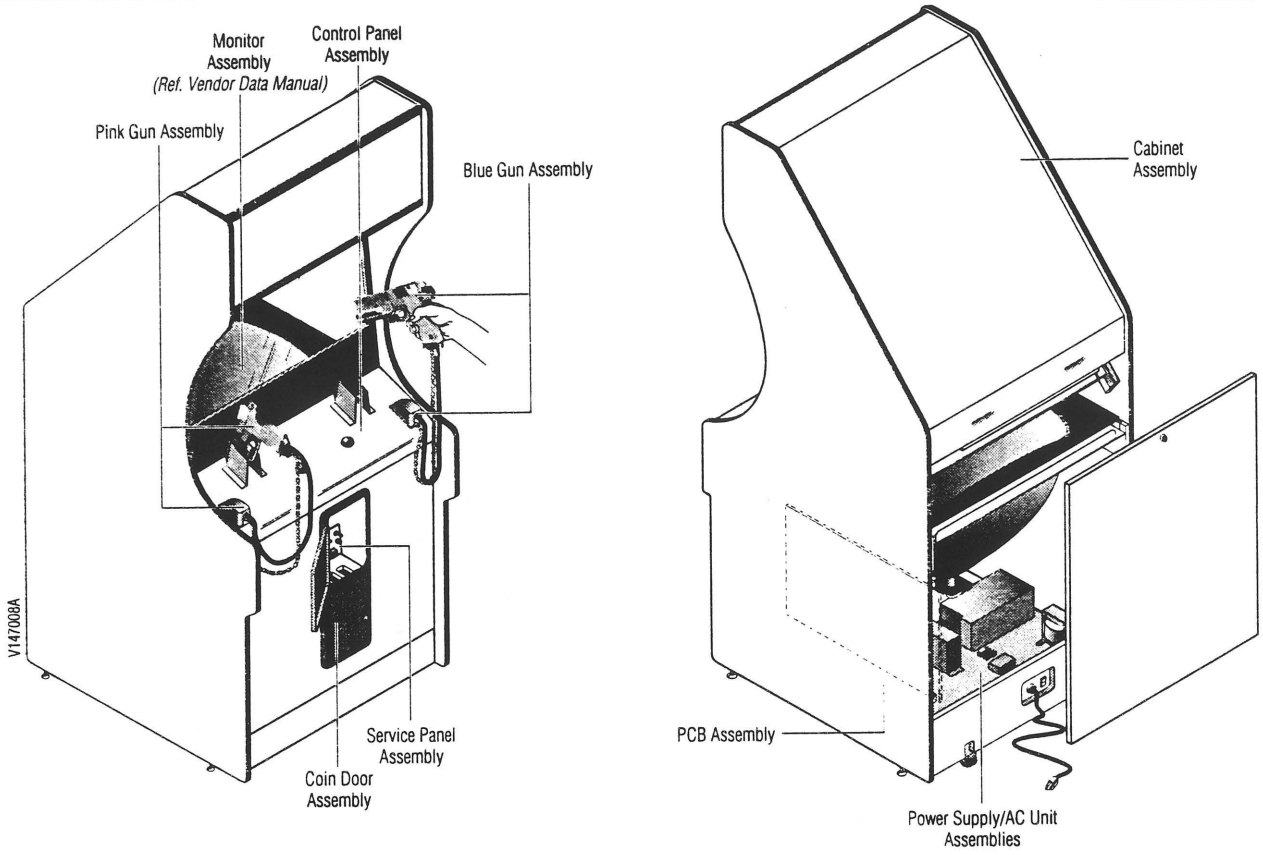

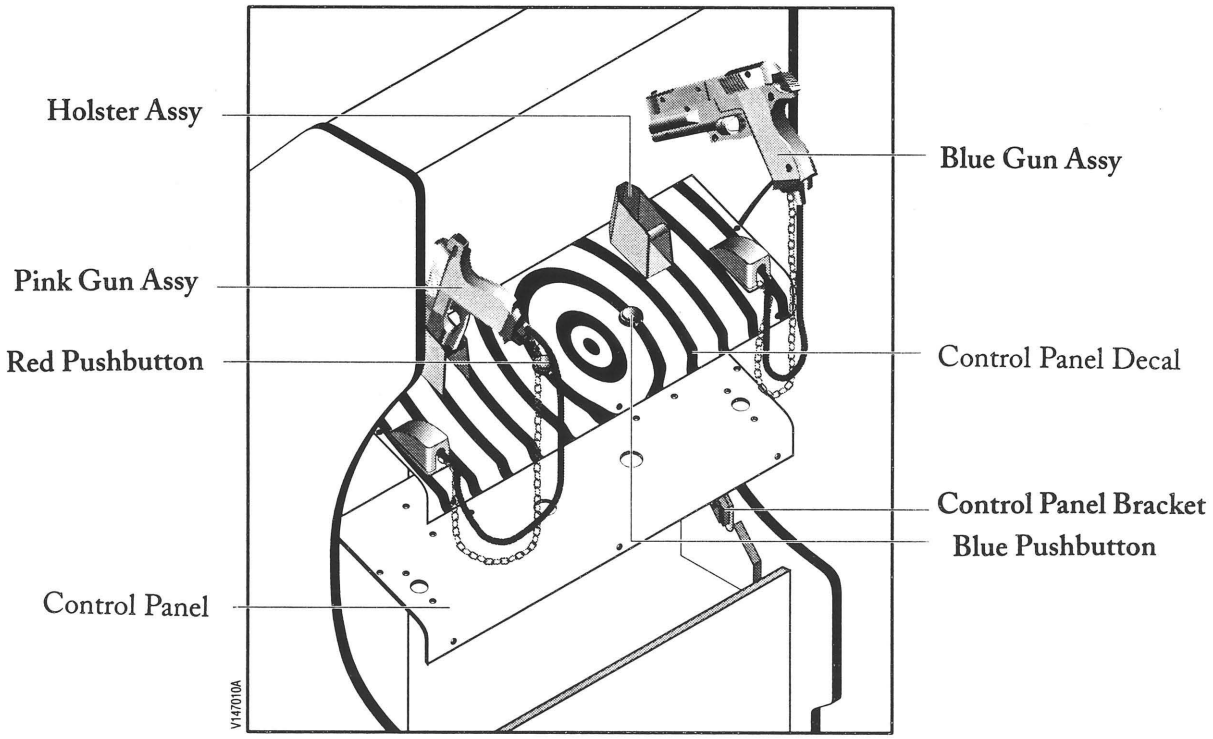

Figure 3-1 Typical Installation

3.4 Control Panel

1. Remove the overlay from the existing control panel and install the POINT BLANK™ overlay provided in the kit.

2. Install the 2 pushbutton switches with lamps.

3. Separate a holster mounting plate from one of the 2 black holsters. Using the plastic holster as a template, drill four 1/4 in. clearance holes through the control panel for the mounting studs on each of the mounting plates. Install the holsters with mounting plates, and secure the 8 studs using the 1/4 inch flat and lockwashers provided.

4. Prepare two 2-3/8 x 1 inch rectangular cutouts in the control panel where the gun cords are to be mounted. Using the tether mounting bracket as a template, drill four #10 clearance holes for each gun mount. Attach each gun cord assembly to its mounting bracket using two M6 hex nuts, flat and lockwashers (not provided in kit).

5. Feed the gun connectors and cables down through the cutouts. Secure the tether mounting brackets to the control panel using #10 tamper resistant fasteners (not provided in kit).

6. Connect the two gun cables to the main wiring harness. Connect the pushbutton switches and lamps. Reference drawings [PB50-03356 and -03360] for proper connections.

3.5 Cabinet Graphics

1. Install the cabinet graphics provided. Float the graphics on by applying a spray of ammonia cleaner to each surface. Smooth out the bubbles and liquid with a paint squeegee. Wipe the decal dry with a soft cloth.

2. Install the marquee overlay and game play instructions provided in the kit.

3.6 Power-Up

1. Prior to power-up, temporarily disconnect the 56-pin connector on the Main PCB, and J1 and J2 on the Position PCB. Turn on the main AC power. Using a voltmeter, verify the voltages at the appropriate connector pins. *If a problem exists, stop and correct it before reconnecting the PCBs.*

2. Perform the Gun Alignment and Initialization per section 4.1.

3. Set the Coin and Game Options, and adjust the monitor in TEST mode.

4.0 SET-UP and TEST

4.1 Gun Alignment and Initialization

IMPORTANT: Perform this procedure in the sequence indicated. Always re-initialize the game after replacing either the PCBs, ROMS, monitor, or gun(s).

1. Open the coin door to gain access to the SERVICE panel.
2. While pressing the SERVICE button, toggle the TEST switch ON.
3. Release the SERVICE button.
4. The GUN INITIALIZE screen will appear as shown in Figure 4-1.

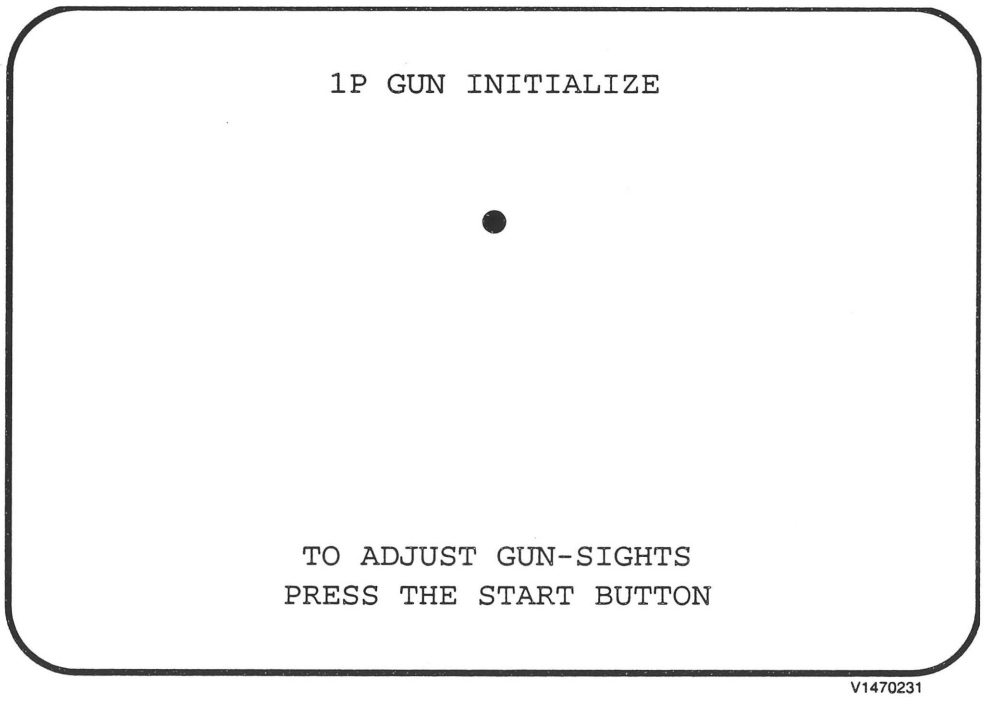

Figure 4-1 GUN INITIALIZE Screen

5. Press the START button for the 1-Player gun. The GUN ADJUSTMENT Screen will appear as shown in Fig. 4-2.

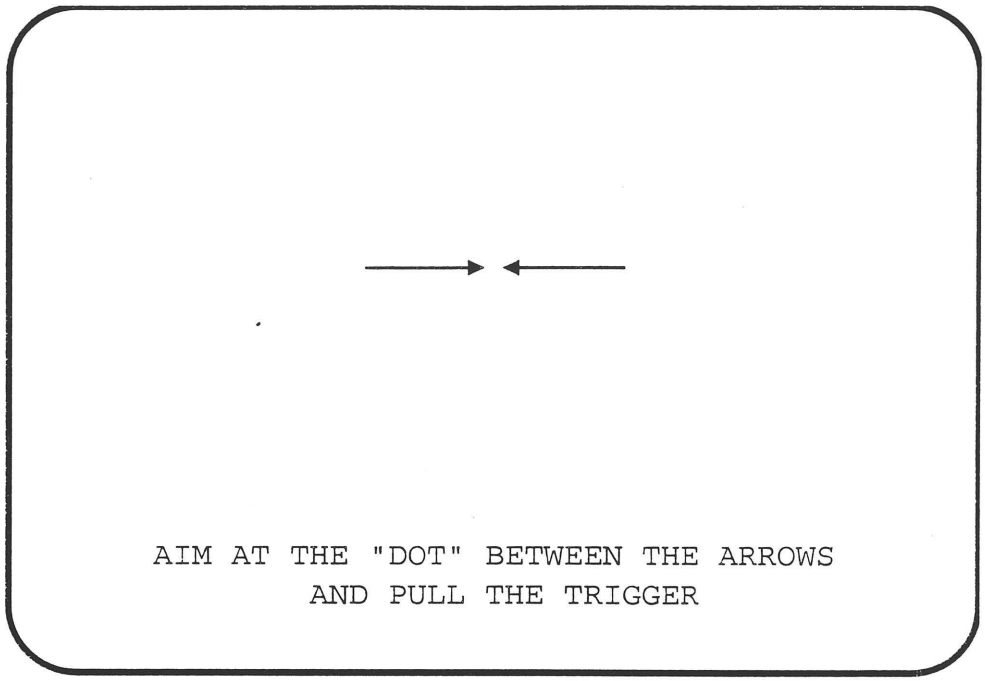

Figure 4-2 GUN ADJUSTMENT Screen

6. While holding the gun level, aim at the screen between the two arrows.

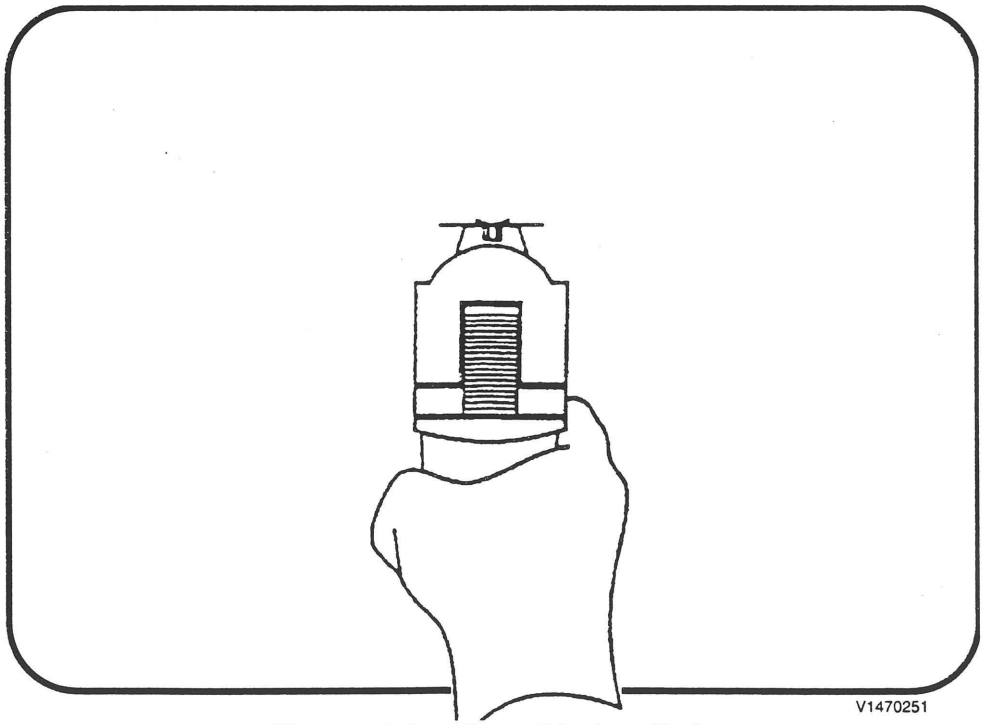

Figure 4-3 Gun Aiming Point

7. After 1 second, a cursor will appear between the arrows, as in Fig. 4-4.

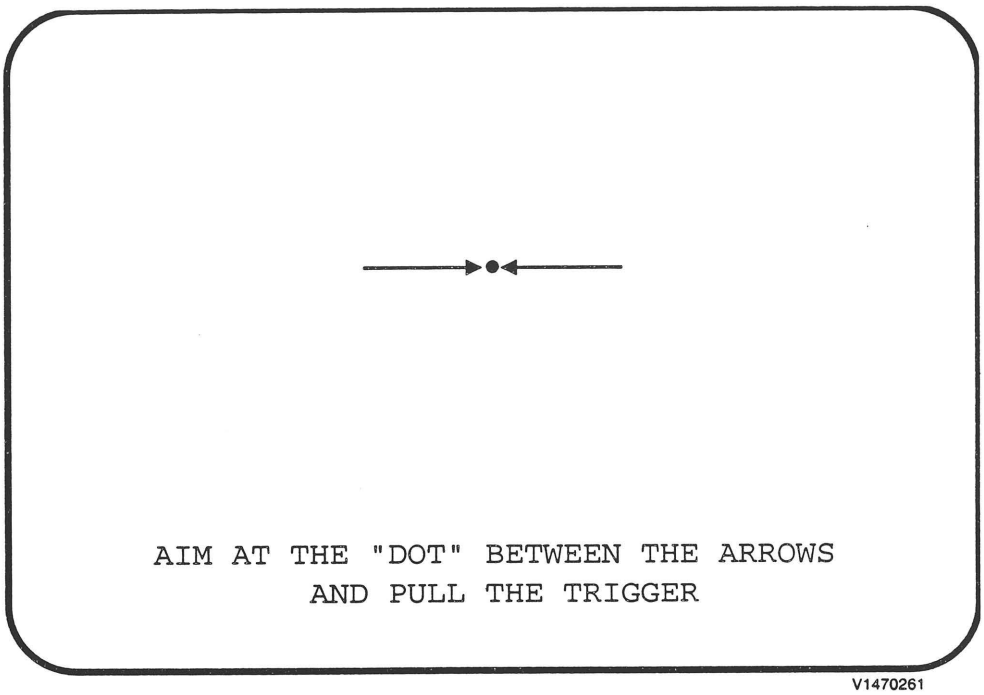

Figure 4-4 Gun Adjustment Screen with cursor

8. With the gun sight aimed directly at the cursor, pull the trigger. The Gun Adjustment Check Screen will appear, as in Fig. 4-5. Proper gun operation is verified when the cursor appears at each location hit within the screen area.

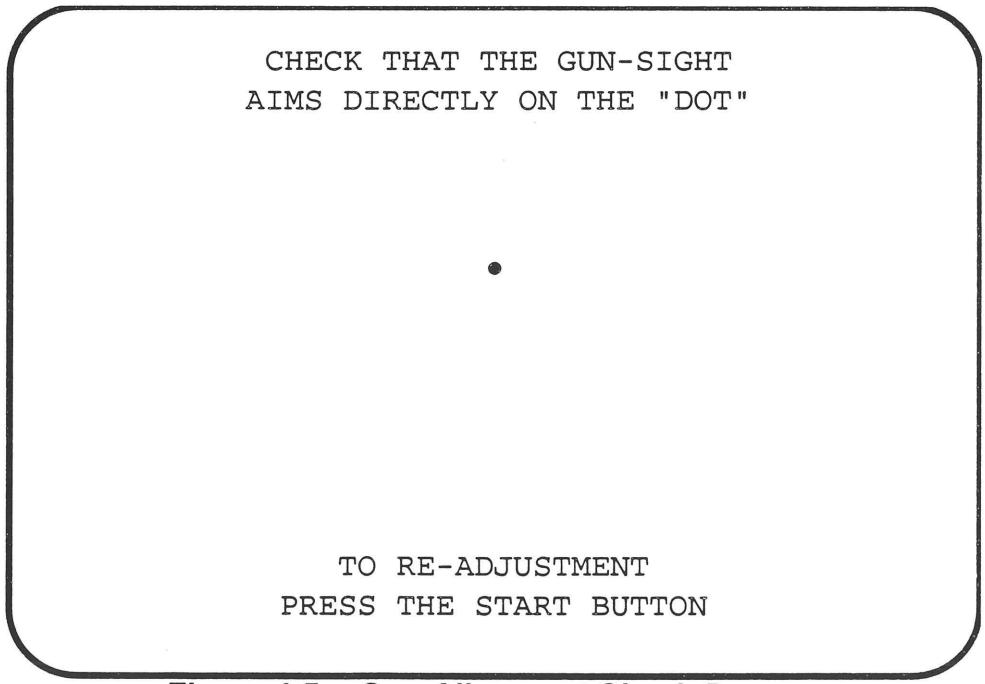

Figure 4-5 Gun Alignment Check Screen

9. If the cursor does not seem to track the gun aiming point, press the START button and repeat the adjustment procedure.

10. Press the SERVICE button again. The 2-Player Gun Alignment Screen will appear. Repeat steps 5 through 8 for the 2-Player gun.

4.2 Test Mode

Test mode allows the operator to test the game controls, set various game options (such as number of lives per credit), set coin options (such as number of coins per credit), and test and adjust the video monitor.

The TEST switch is located in side the coin door. Upon entering TEST Mode, the SWITCH TEST screen will appear. The other test screens will appear in sequence each time the SERVICE button is pressed, as shown in Fig. 4-6.

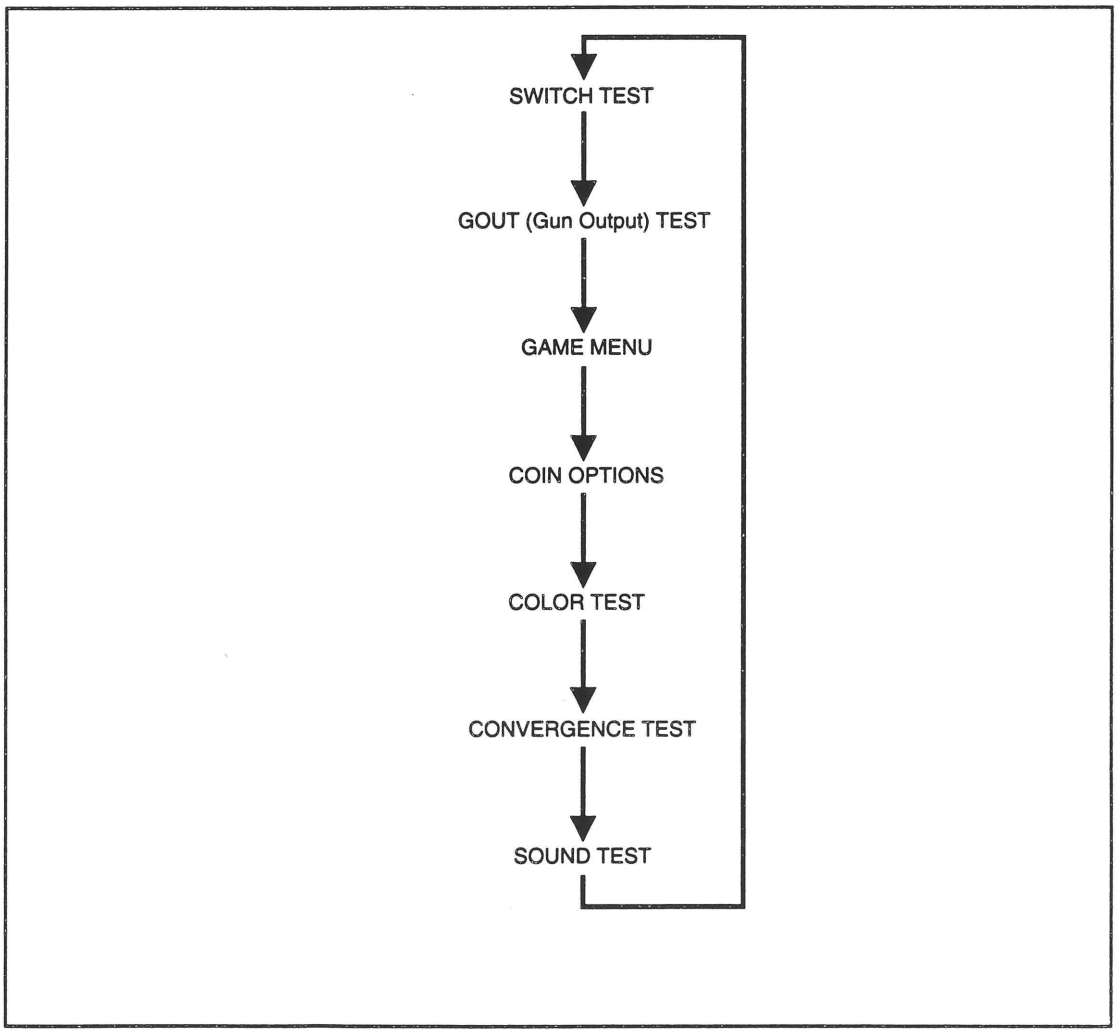

Figure 4-6 Test Mode Sequence

4.2.1 Switch Tests

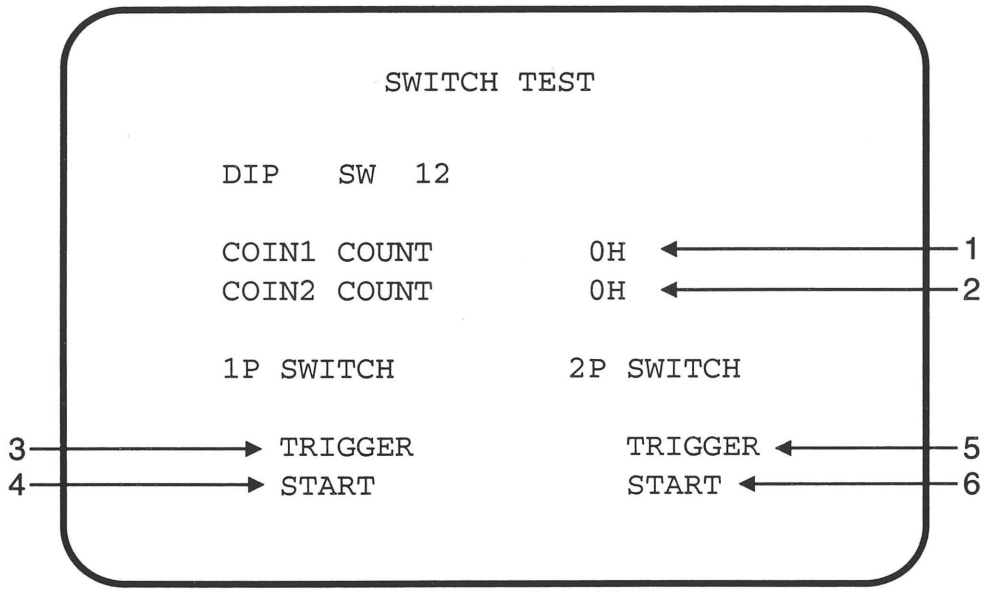

Figure 4-7 SWITCH TEST Screen

No	Item	Description
1	COIN 1 COUNT	The count (in hex) increases by one each time the COIN1 switch is closed.
2	COIN 2 COUNT	Not used.
3	1P TRIGGER	Turns red when the trigger of the 1-P Gun is pulled.
4	1P START	Turns red when the 1-Player START button is pressed.
5	2P TRIGGER	Turns red when the trigger of the 2-P Gun is pulled.
6	2P START	Turns red when the 2-Player START button is pressed.

Table 4-1 Switch Test

Press the SERVICE button to return to the Gun Output Test (GOUT TEST).

4.2.2 Gun Output Tests

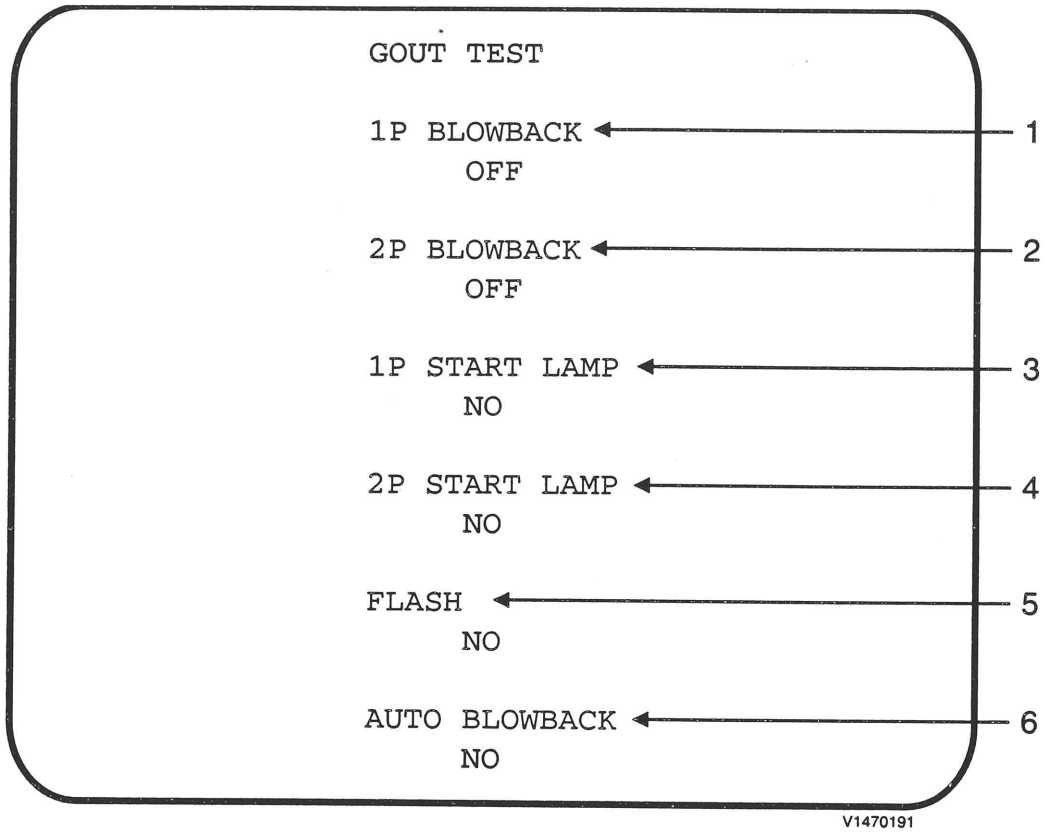

Figure 4-8 GOUT (Gun Output) TEST Screen

Press the 1-Player START button (or the 1-Player gun trigger) to select the test item.
Press the 2-Player START button (or the 2-Player gun trigger) to activate the selected item.

No	Item	Description
1	1P BLOWBACK	Tests the "Recoil" Solenoid of the 1-Player gun
2	2P BLOWBACK	Tests the "Recoil" Solenoid of the 2-Player gun
3	1P START LAMP	Tests the 1-Player START button lamp. When activated, the screen display will change to "YES" and the lamp will flash.
4	2P START LAMP	Tests the 2-Player START button lamp. When activated, the screen display will change to "YES" and the lamp will flash.
5	FLASH	Not Used
6	AUTO BLOWBACK	Selects whether the "Recoil" Solenoids in the guns are activated each time the trigger is pulled during game play.

Table 4-2 Gun Output Tests

Press the SERVICE button to continue to the GAME OPTIONS Menu screen.

4.2.3 Game Options Menu

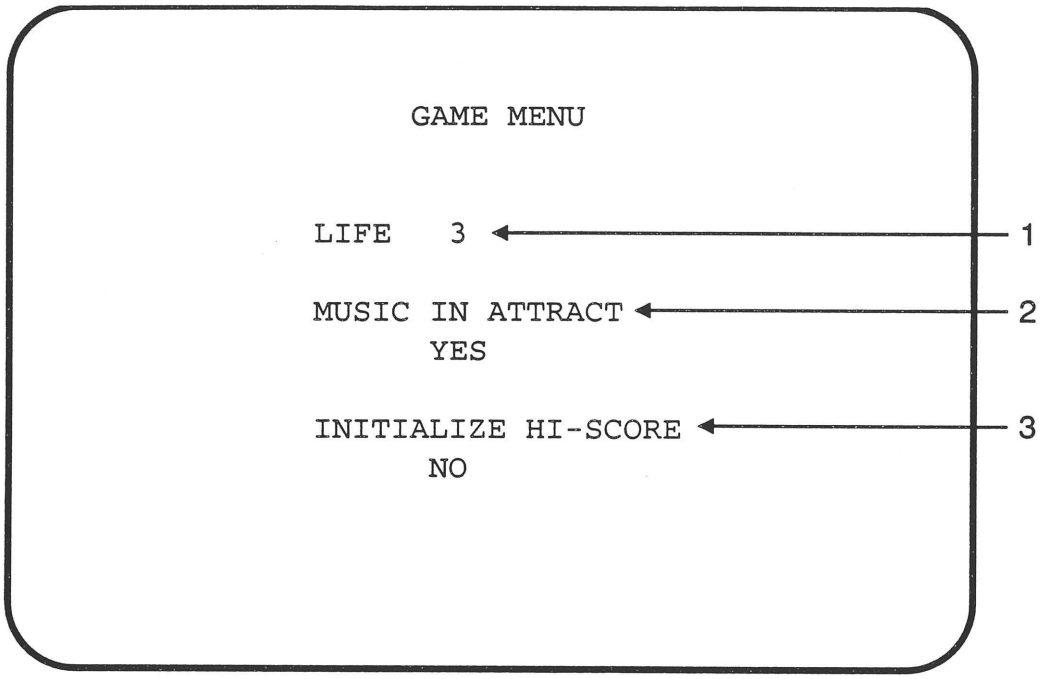

Figure 4-9 GAME OPTIONS Menu Screen

No	Item	Description	Factory Setting
1	LIFE	Number of lives at start of game. (1 to 5).	3
2	MUSIC IN ATTRACT	Sound in Attract mode. (Yes or NO).	YES
3	INITIALIZE HI-SCORE	Initialize high score in each game stage	NO

Table 4-3 Game Options

Press the SERVICE switch to continue to the COIN OPTIONS screen.

4.2.4 Coin Options Menu

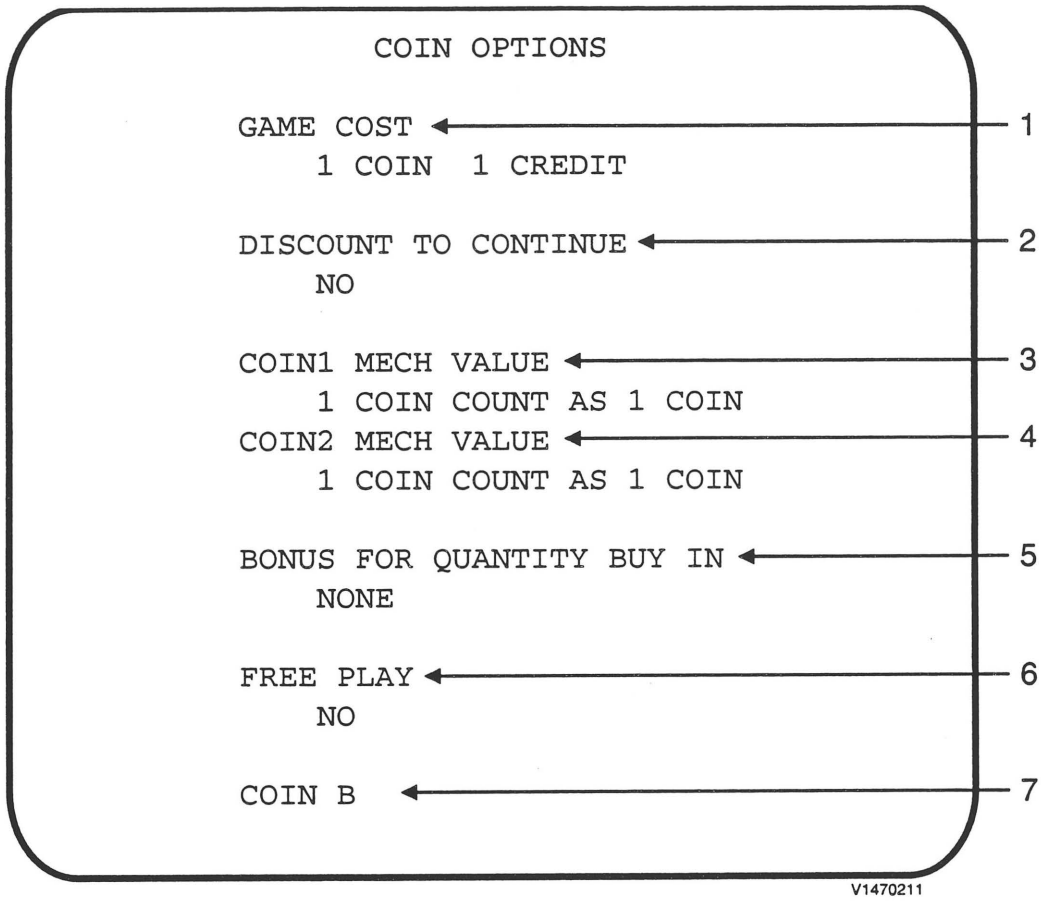

Figure 4-10 COIN OPTIONS screen

No	Item	Description (range of options)	Factory Setting
1	GAME COST	Number of coins required for one game (one credit). (1 to 9)	1
2	DISCOUNT TO CONTINUE	Half-price to continue game. (YES or NO)	NO
3	COIN 1 MECH VALUE	Coin count per coin entered. (1 to 9)	1
4	COIN 2 MECH VALUE	Coin count per coin entered. (1 to 9)	1
5	BONUS FOR QUANTITY BUY IN	Bonus credit when buying multiple games at game start. (2 coins gives 1 credit to 9 coins gives 3 credits)	NONE
6	FREE PLAY	Play starts when START button is pressed without coins. (YES or NO)	NO
7	COIN BOX	Not used. (1 Way or 2 Way)	1WAY

Table 4-4 Coin Options

4.2.5 Color Test

4.2.6 Convergence Test

	Explanation
Color Bars	Four (4) bars (Red, Grn, Blue, Wht from top to bottom) will be displayed. Use the gun trigger to sequence through 8 screens with progressively larger luminance gradations. Verify that the color segments on the farthest right is sufficiently bright without overdriving, and that the farthest left segments are just slightly brighter than the black background. (see WHT Window test).
White Window Covergence Screen	Verify that the screen is centered and that the entire screen is visible. If not, adjust vertical height, centering, and horizontal width and centering. This screen may be used to adjust the screen brightness using a luminance/chromaticity meter. Adjust contrast control to achieve a light output of 35 ft-L +/-3, measured in the center of the screen. This screen may also be used to check the color convergence.
Red Window	Verify color.
Green Window	Verify color.
Blue Window	Verify color.
Yellow Window	Verify color.
Light Blue Window	Verify color.
Purple Window	Verify color.
Black Window	This screen may be used when adjusting the brightness control. Using a luminance meter, adjust for a light output level between 0.01 and 0.15 ft-L, measured in the center of the screen.

Table 4-5 Color and Convergence Screen Description

4.2.7 Sound Test

The Sound Test screen allows the various game sounds to be checked.

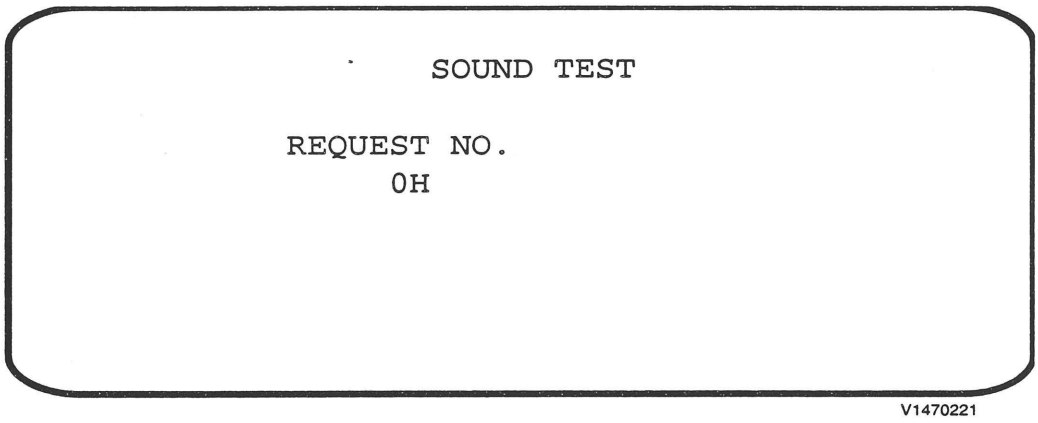

Figure 4-11 SOUND TEST Screen

Pull the trigger of either gun to play the currently selected sound. Press the 2-Player START button to move to the next sound. Press the 1-Player START button to return to the previous sound.

Press the SERVICE button to return to the Switch Test screen, or toggle the TEST switch OFF to return to the game screen.

5.0 TROUBLESHOOTING and MAINTENANCE

5.1 Troubleshooting

Before calling your distributor or NAMCO for service, check the following:

1. If a general system failure occurs
    - Check the main AC fuse.
    - Check the output of the +5/+12VDC power supply.
    - Verify that all connectors are properly seated.
2. If sound but no video
    - Check the AC voltage to the monitor.
    - Check the monitor chassis fuse.
    - Check the RGB cabling and PCB connections.
3. If gun operation is faulty
    - Perform a gun alignment and initialization per sec. 4.1.
    - Check the output of the +24VDC power supply. Verify that +24VDC is present at J2 pins 1 and 2 of the Position PCB Assy.
    - Verify that the system is wired in accordance with the Overall Harness drawing [PB50-05168-00].
    - Check the gun solenoid, trigger switch, and gun cable.
    - Check the gun lens, monitor glass, and mirror (if used). Clean as needed.

5.2 PCB Service

If a faulty game PCB is suspected, it may be returned to NAMCO for repair under warranty. Contact your distributor to obtain return authorization.

WARNING: DO NOT ATTEMPT TO PERFORM COMPONENT REPAIR ON YOUR PCB OR THE WARRANTY WILL BE VOIDED.

NOTE: IF REPAIRS ARE REQUIRED, ALWAYS RETURN YOUR PCBs AS A SET, CONSISTING OF THE MAIN PCB AND POSITION PCB. ALWAYS RECORD SERIAL NUMBERS OF PCBs ON SHIPPING DOCUMENTS.

CAUTION: USE ANTI-STATIC PROTECTION SUCH AS GROUND STRAPS WHEN HANDLING THE PCBs. WHEN PACKING YOUR PCB SET FOR SHIPMENT, WRAP IN ANTI-STATIC MATERIAL AND PADDING. IMPROPER PACKING OF PCBs MAY VOID THE WARRANTY.

5.3 Gun Removal and Disassembly

CAUTION!
Always perform the Gun Alignment and Initialization procedure (per section. 4.1) after replacement of gun components or assemblies.

5.3.1 Opening the Gun

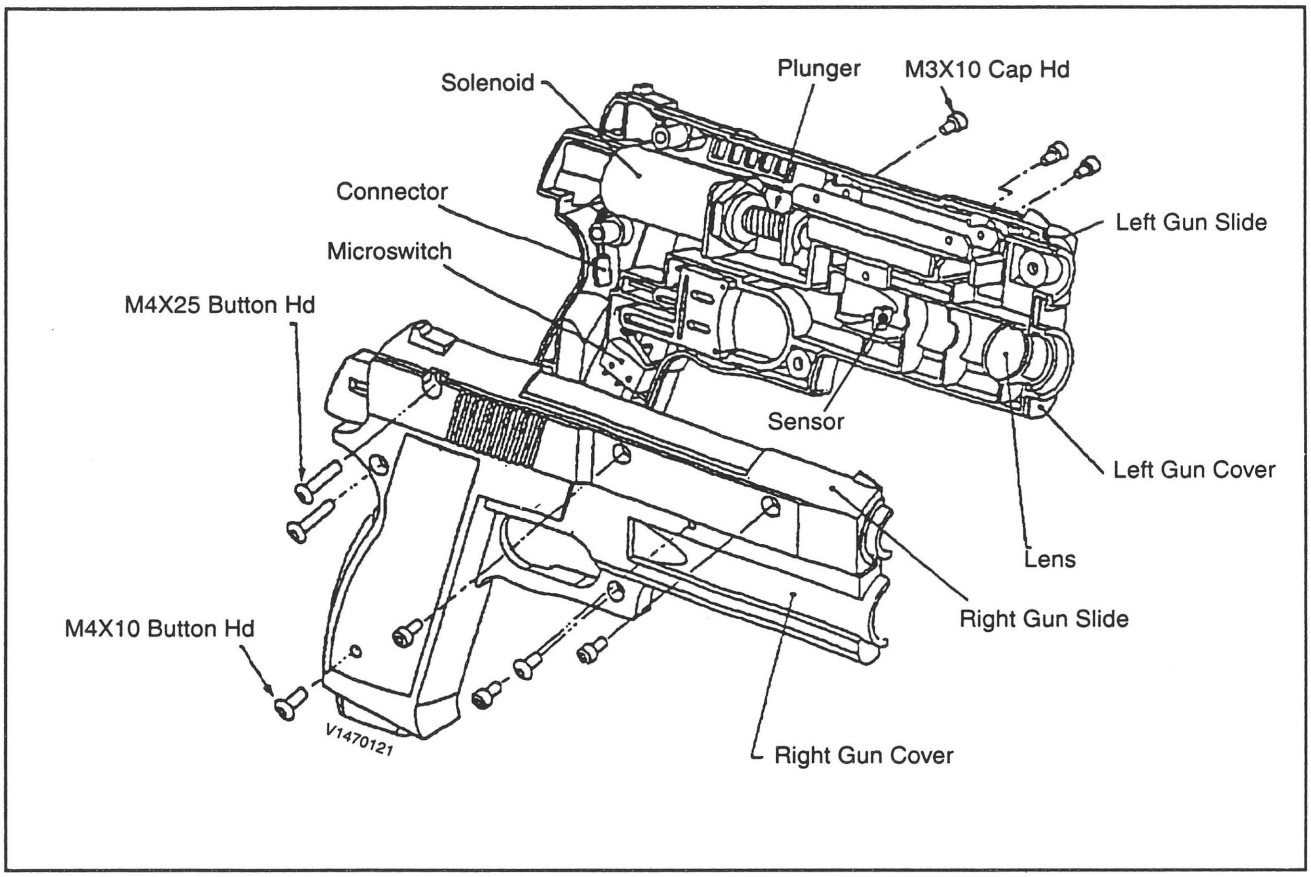

Figure 5-1 Opening the Gun

1. Remove the four M3 x 10 cap screws and one M4 x 25 button head screw that attach the Gun Side halves.

2. Remove the Gun Side halves.

3. With the gun assembly laying on its left side, remove the three M4 x 10 button head screws, one M4 x 25 button head screw, and one M3 x 10 cap screw.

4. Lift the right Gun Cover off the gun assembly. Be careful not to scratch the lens. **[Note: When reassembling the gun, the convex side faces out!]**

5.3.2 Replacing the Gun Solenoid

1. Remove the Gun Covers and Gun Side halves.

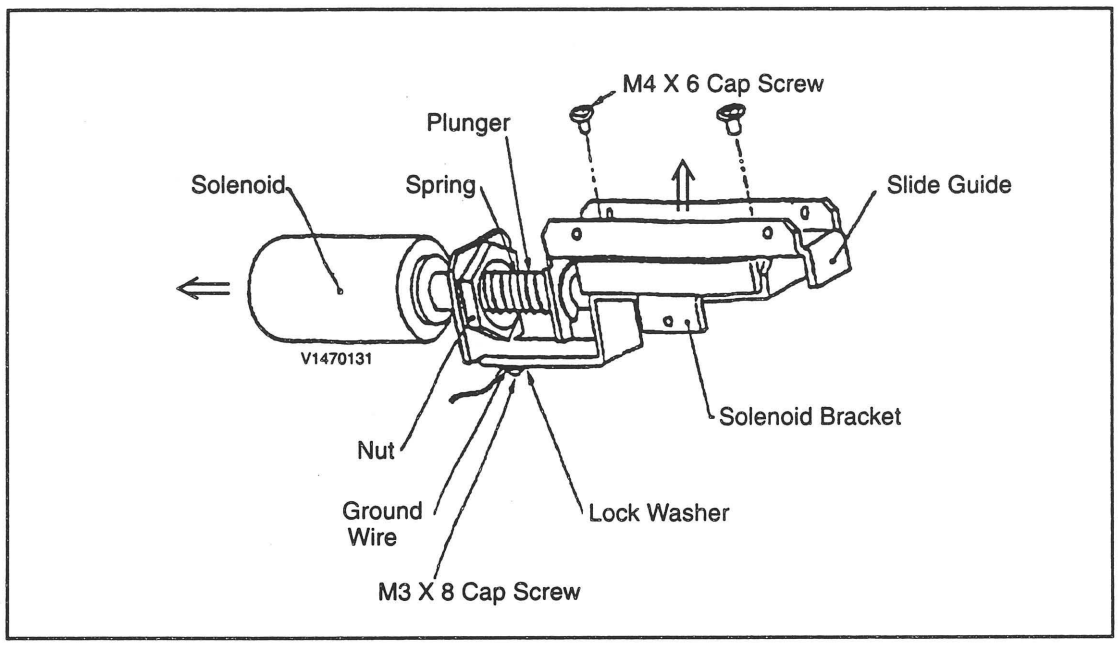

Figure 5-2 Gun Solenoid Assembly

2. Disconnect the solenoid connector.
3. Remove the M3 x 10 cap screw attaching the the solenoid/slide assembly to the left Gun Cover.
4. Remove the M3 x 8 cap screw and washer attaching the Ground Wire to the Solenoid Bracket.
5. Loosen the solenoid nut.
6. Pull the solenoid away from the bracket.
7. Remove the two M4 x 6 cap screws attaching the Slide Guide to the bracket.
8. Remove the solenoid plunger and spring.

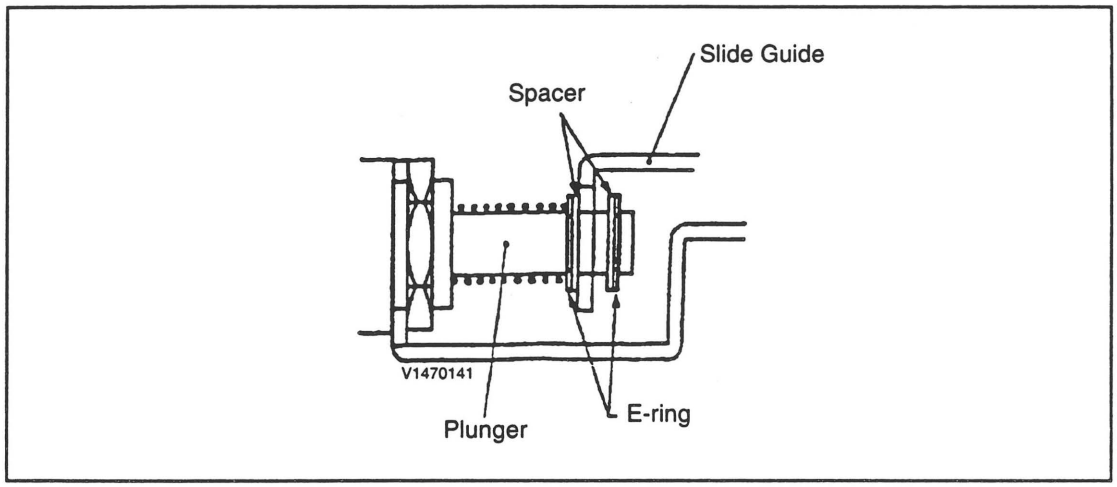

Figure 5-3 Solenoid Plunger detail

9. When reassembling the solenoid, pay particular attention to the order of E-rings and spacers. Make sure the solenoid harness faces downward upon reassembly.

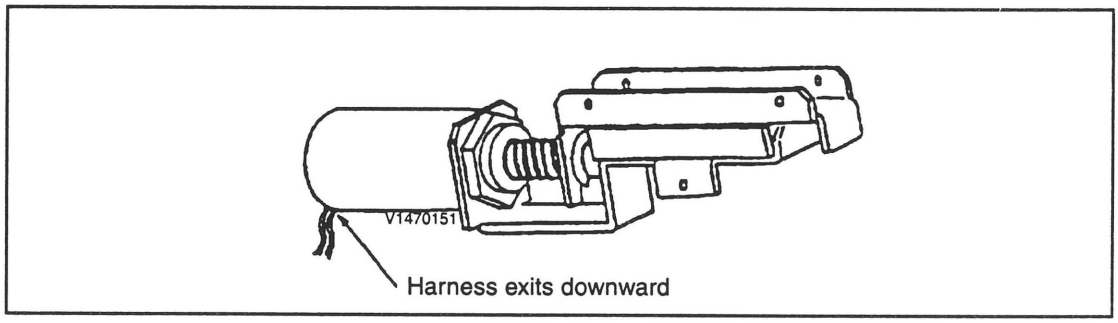

Figure 5-4 Solenoid Reassembly

5.3.3 Trigger Switch Replacement

1. Remove the Gun Covers and Gun Side halves.
2. Remove the two screws that attach the microswitch to its bracket.
3. Remove the two connectors that attach the Tigger microswitch to the Gun Harness, and replace the switch.
4. Upon reassembly, check the condition of the Trigger Spring.

APPENDIX A: PARTS LIST and WIRING DIAGRAMS

Point Blank Kit 2 [Assy No. PB01-03156-00]

Item	Part No.	Description	Qty.	
1	**PB03-03141-00**	**GUN ASSY, PINK**	**1**	
2	PB09-03430-00	GUN COVER, LEFT, PINK	1	
3	PB09-03431-00	GUN COVER, RIGHT, PINK	1	
4	PB09-03426-00	GUN SLIDE, LEFT, PINK	1	
5	PB09-03427-00	GUN SLIDE, RIGHT, PINK	1	
6	PB09-296-421	SPRING, TRIGGER	1	
7	PB09-000-228	MICROSWITCH	1	
8	PB09-004-056	SOLENOID	1	
9	PB21-04904-00	HARDWARE, GUN ASSY	1	
10	**PB03-03141-01**	**GUN ASSY, BLUE**	**1**	
11	PB09-03432-00	GUN COVER, LEFT, BLUE	1	
12	PB09-03433-00	GUN COVER, RIGHT, BLUE	1	
13	PB09-03428-00	GUN SLIDE, LEFT, BLUE	1	
14	PB09-03429-00	GUN SLIDE, RIGHT, BLUE	1	
15	PB09-296-421	SPRING, TRIGGER	1	
16	PB09-000-228	MICROSWITCH	1	
17	PB09-004-056	SOLENOID	1	
18	PB21-04904-00	HARDWARE, GUN ASSY	1	
19	**PB05-03150-00**	**HOLSTER ASSY**	**2**	
20	PB90-03080-01	HOLSTER, ABS, BLACK	2	
21	PB10-05090-00	MOUNTING PLATE, HOLSTER	2	
22	TC11-04894-00	SPACER, HOLSTER	2	
23	TC96-04893-00	BUMPER, HOLSTER	2	
24	VG20-03339-06	SCREW, BTN HD TP TORX, 10-32 X 3/8, STL BLK ZN	4	
25	VG20-02865-05	WASHER, FLAT, #10, STL BLK ZN	4	
26	VG20-02875-05	WASHER, LOCK, INT TOOTH, STL	4	
27	**PB05-04715-00**	**TETHER ASSY**	**2**	
28	PB10-03152-00	BRACKET, CHAIN	2	
29	PB10-03153-00	CLIP, CHAIN	4	
30	PB20-03154-00	CHAIN, NO.4 MACHINE 0.12 WIRE X 0.66 PITCH ZINC PLATE, 38 LINK	2	
31	VG20-02895-04	SCREW, PAN HD PHIL 6-32 X 1/4 STL ZN	4	
32	VG20-03337-06	SCREW, BTN HD TP TORX 8-32 X 3/8 STL BLK-ZN	2	
33	VG20-03322-03	NUT, NYLON LOCK 6-32 STL ZN	4	
34	VG20-03322-04	NUT, NYLON LOCK 8-32 STL ZN	2	
35	VG20-02865-04	WASHER, FLAT NO. 8 STL ZN	2	
		GAME BOARD		
36	PB03-03319-00	PCB ASSY, MAIN	1	
37	PB03-03320-00	PCB ASSY, POSITION	1	
38	VG20-01370-00	FOOT, PCB MOUNTING W/ SCREW	4	
39	SK47-00145-00	FCC FOIL SHIELD	1	
		WIRE HARNESSES		
40	PB50-03354-00	HARNESS, AC TO 24V PS	1	
41	PB50-03356-00	HARNESS, GUN	1	
42	PB50-03357-00	HARNESS, JAMMA	1	
43	PB50-03358-00	HARNESS, POSITION	1	
44	PB50-03359-00	HARNESS, SERVICE PANEL	1	
45	PB50-03360-00	HARNESS, START	1	
46	TK78-04668-00	ASSY, FERRITE BEAD HOUSING	1	
47	VG78-00198-00	CLAMP, FERRITE (BEAD)	2	
48	VG78-00199-00	HOUSING, FERRITE	1	
		GRAPHICS		
49	PB40-03093-00	CONTROL PANEL OVERLAY	1	
50	PB40-03155-00	MARQUEE, SILKSCREENED, KIT	1	
51	PB40-03094-00	INSTRUCTION PANEL	1	
52	PB40-04956-00	DECAL, SIDE PANEL, KIT 2	2	
53	VG46-02653-00	LABEL, FCC	1	
		COMPONENTS		
54	VG88-04690-00	POWER SUPPLY, SWITCHING 24V, W/COVER, #SNP-9109	1	
55	VG80-03149-00	PUSH BTN, ILLUM RND SM LOW PROFILE, RED	1	
56	VG80-03149-02	PUSH BTN, ILLUM RND SM LOW PROFILE, BLUE	1	

FILE NAME	NO.	DESCRIPTION	QTY	MAT'L	FINISH	COMMENTS

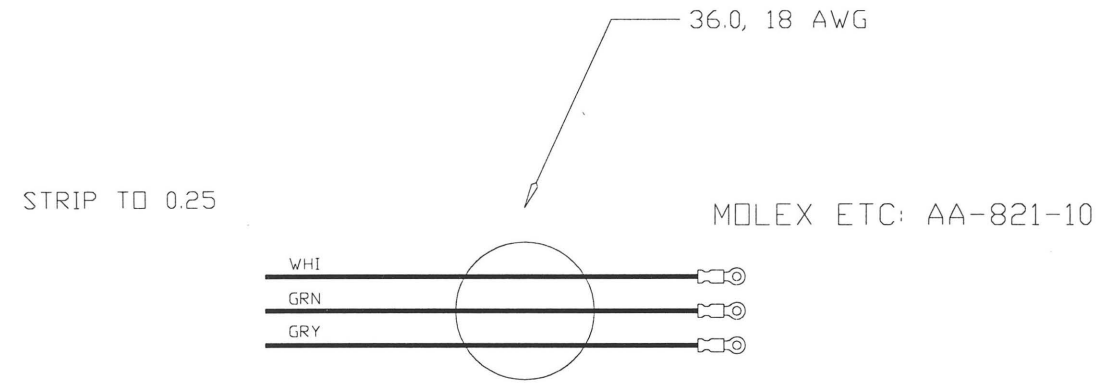

△ A

DRAWN BY	TONY ONG
APPROVED	
CHECKED	DATE 6/94
TOLERANCES UNLESS OTHERWISE SPECIFIED: X.XX ± 0.01 X.XXX ± 0.005 ANGLES ± 1°	

namco
150 Charcot Avenue
San Jose, CA 95131

TITLE
HARNESS,
24 VAC (KIT)

SIZE	DRAWING NO.	REV
B	PB50-03354-00	A

DO NOT SCALE | SHT 1 OF 1

FILE NAME	NO.	DESCRIPTION	QTY	MAT'L	FINISH	COMMENTS

1. LABEL DESIGNATOR ONTO CONNECTOR
2. ALL WIRES ARE 22 AWG

MOLEX ETC: AA-2201.

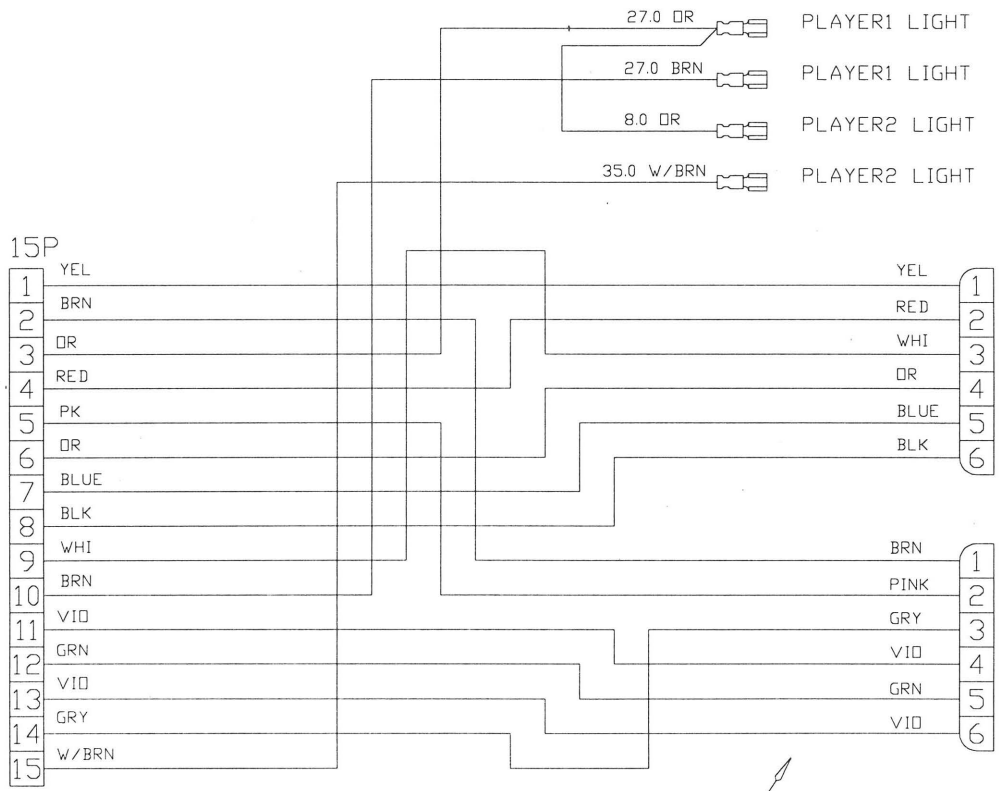

ALL LENGTHS ARE 22.0

MOLEX PLUG
HOUSING: 03-09-2154.
PIN: 02-09-2116.

TO LEFT GUN

AMP PLUG
HOUSING: 172168-1.
PIN 170362-1.

TO RIGHT GUN
SAME AS ABOVE.

ALL LENGTHS ARE 41.0

△A

DRAWN BY	TONY ONG
APPROVED	
CHECKED	
DATE	6/94

namco
150 Charcot Avenue
San Jose, CA 95131

TITLE
HARNESS,
GUN (KIT)

SIZE	DRAWING NO.	REV
B	PB50-03356-00	A

DO NOT SCALE | SHT 1 OF 1

FILE NAME	NO.	DESCRIPTION	QTY	MAT'L	FINISH	COMMENTS

1. ALL RINGS ARE MOLEX AA-821-10.
2. NAMCO-AMERICA WILL SUPPLY THE JAE CONNECTOR.
3. LABEL DESIGNATOR ONTO CONNECTOR
4. ALL WIRES ARE 22 AWG, UNLESS SPECIFIED

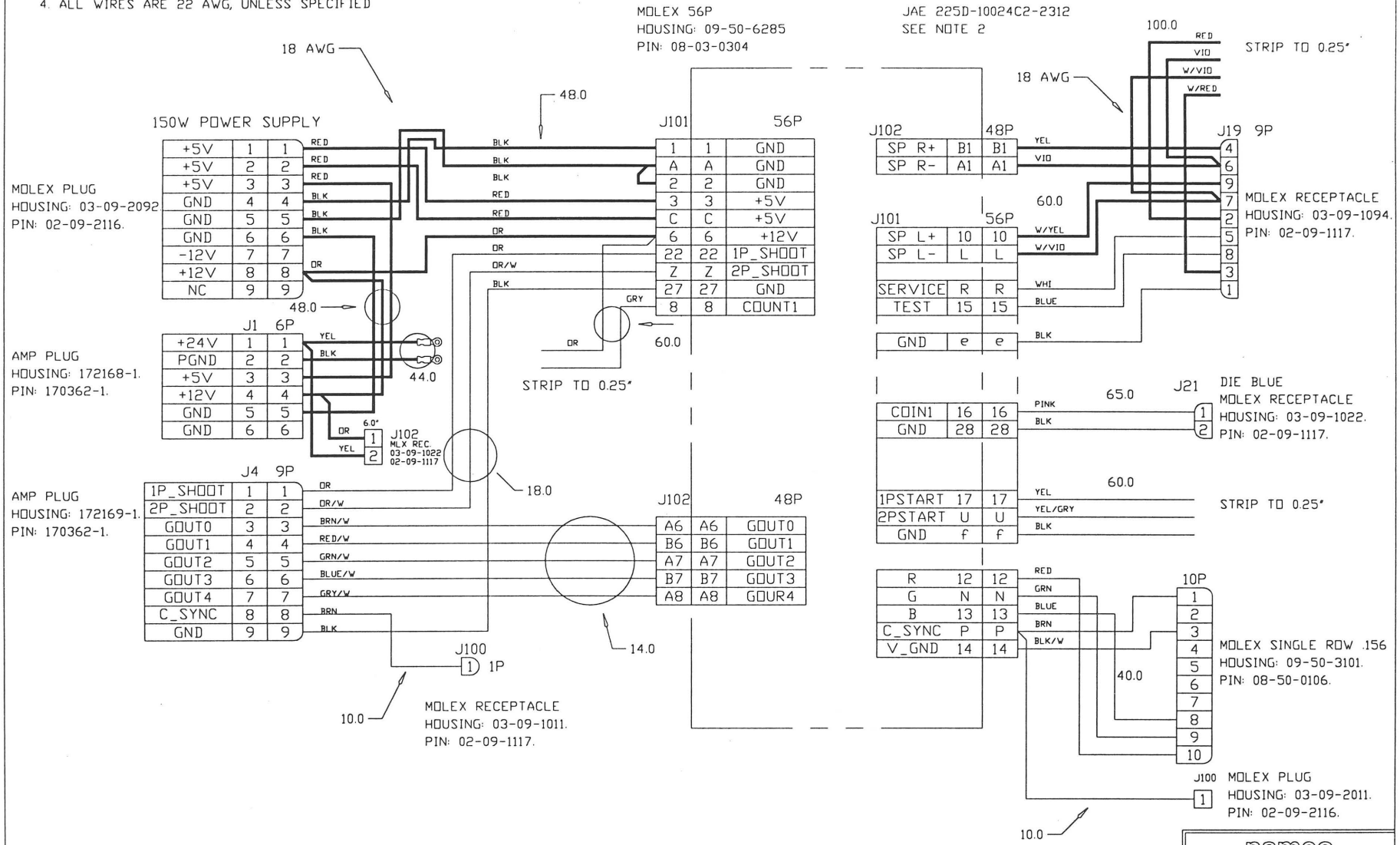

△ A

DRAWN BY	TONY ONG
APPROVED	
CHECKED	DATE 6/94

TOLERANCES UNLESS OTHERWISE SPECIFIED:
X.XX ± 0.01 ANGLES ± 1°
X.XXX ± 0.005

namco
150 Charcot Avenue
San Jose, CA 95131

TITLE
HARNESS, JAMMA (KIT)

SIZE	DRAWING NO.	REV
C	PB50-03357-00	A

DO NOT SCALE | SHT 1 OF 1

FILE NAME	NO.	DESCRIPTION	QTY	MAT'L	FINISH	COMMENTS

1. LABEL DESIGNATOR ONTO CONNECTORS

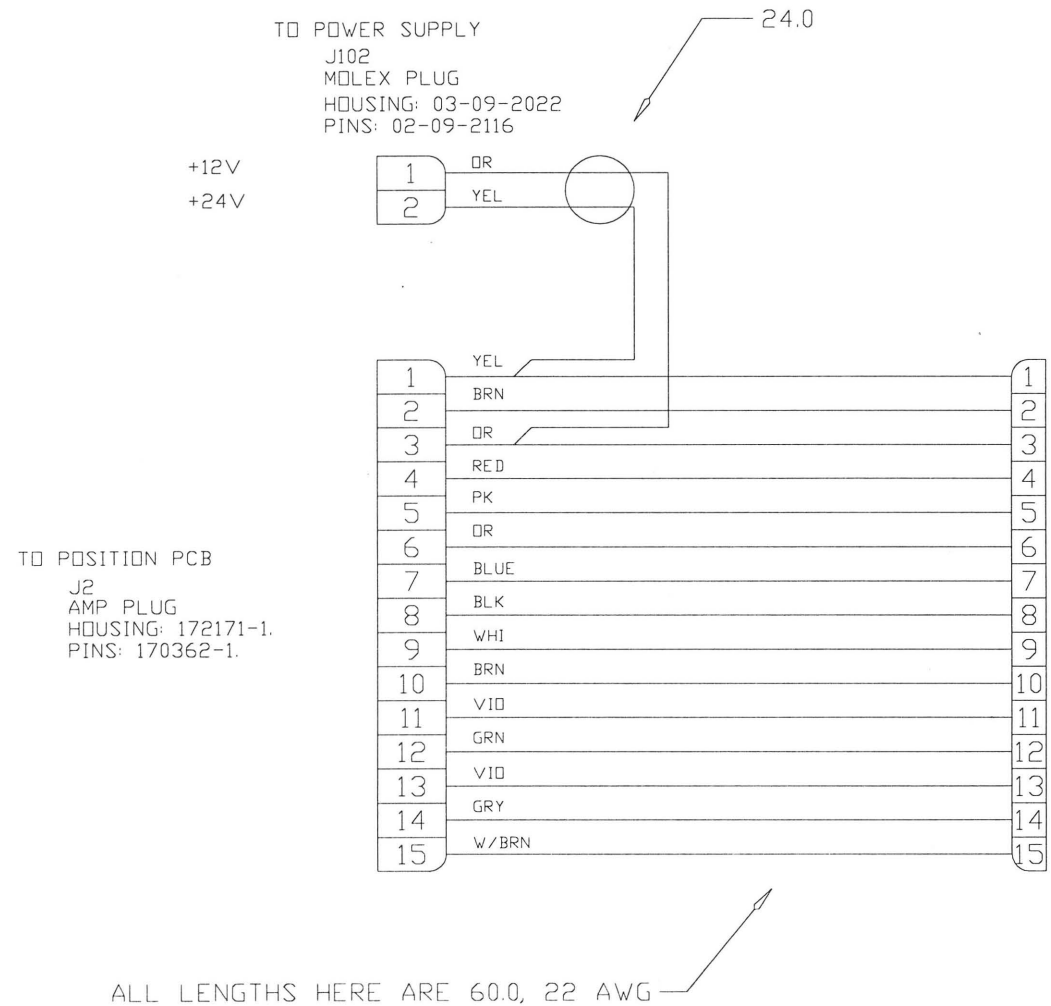

△ A

DRAWN BY	TONY ONG
APPROVED	
CHECKED	DATE 6/94

namco
150 Charcot Avenue
San Jose, CA 95131

TITLE
HARNESS,
POSITION (KIT)

SIZE	DRAWING NO.	REV
B	PB50-03358-00	A

DO NOT SCALE | SHT 1 OF 1

FILE NAME	NO.	DESCRIPTION	QTY	MAT'L	FINISH	COMMENTS

1. LABEL DESIGNATOR ONTO CONNECTOR

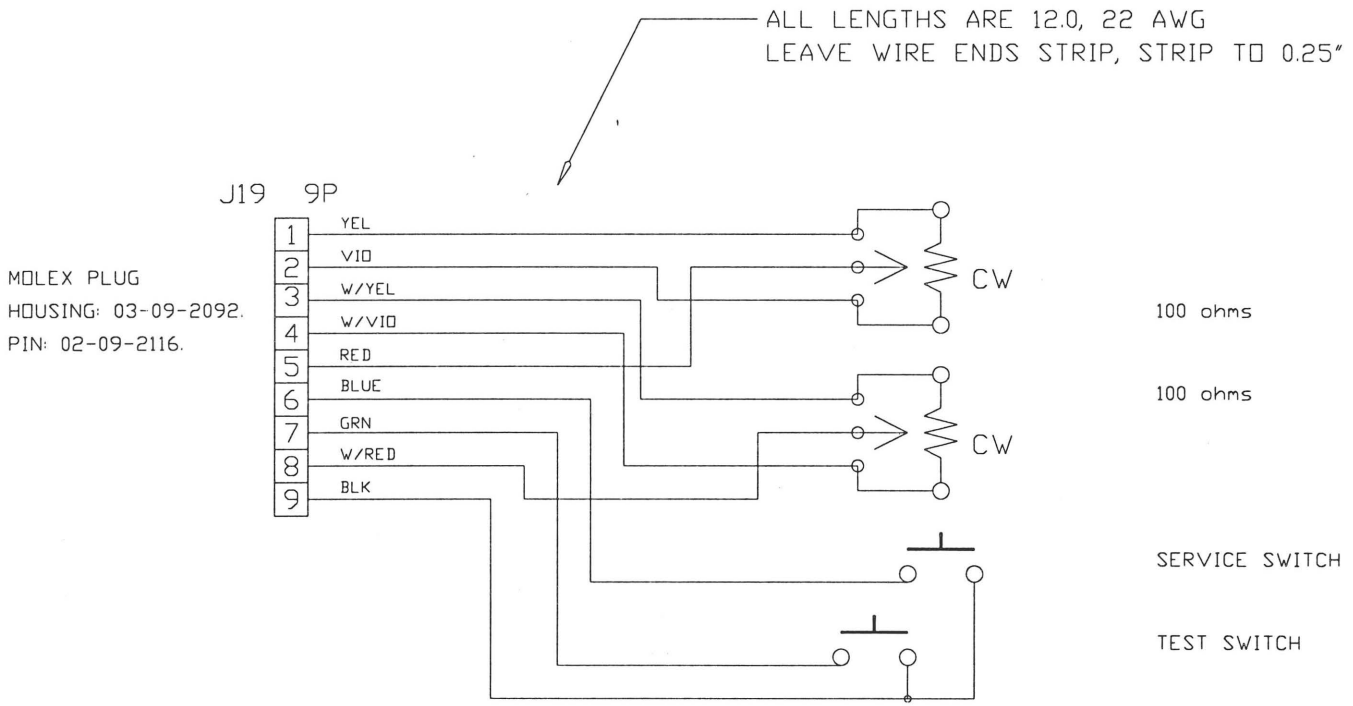

DRAWN BY	TONY ONG
APPROVED	
CHECKED	DATE 6/94

namco
150 Charcot Avenue
San Jose, CA 95131

TITLE
HARNESS,
SERVICE PNL (KIT)

SIZE	DRAWING NO.	REV
B	PB50-03359-00	A

DO NOT SCALE | SHT 1 OF 1

FILE NAME	NO.	DESCRIPTION	QTY	MAT'L	FINISH	COMMENTS

1. LABEL DESIGNATOR ONTO CONNECTOR
2. USE 22 AWG ON ALL WIRES.

TO JAMMA HARNESS

MOLEX PLUG
HOUSING: 03-09-2042.
PIN: 02-09-2116.

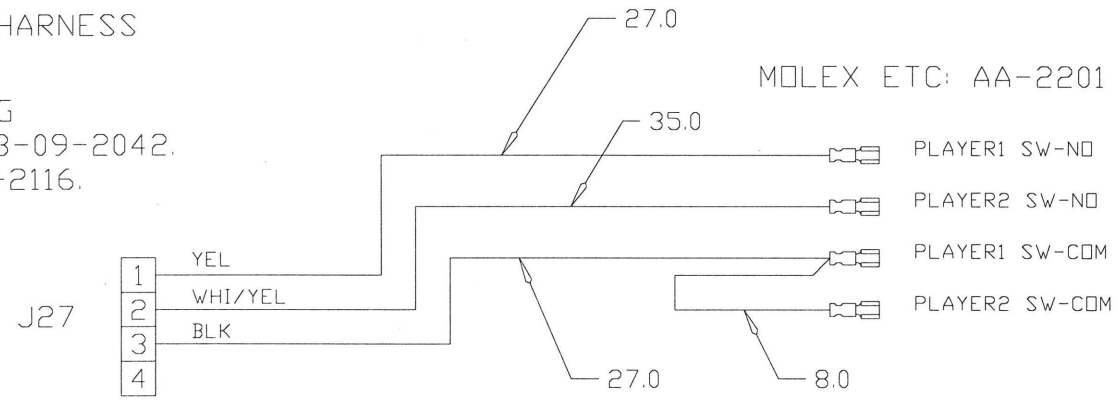

△A

namco
150 Charcot Avenue
San Jose, CA 95131

TITLE
HARNESS, START (KIT)

DRAWN BY	TONY ONG		
APPROVED			
CHECKED		DATE	6/94

SIZE	DRAWING NO.	REV
B	PB50-03360-00	A

DO NOT SCALE | SHT 1 OF 1

NOTES:
1. BE SURE TO GROUND THE MAIN SWITCH PLATE, AND OTHER METAL PARTS.
2. USE FOIL PAPER TO BLOCK BETWEEN COIN DOOR AND MONITOR.
3. CLAMP THE FERRITE BEAD 6.0 INCHES AWAY FROM THE PCB ON THE JAMMA HARNESS.

REVISION			
REV	DESCRIPTION	DATE	APPROVAL
B	PRODUCTION RELEASE	6/94	

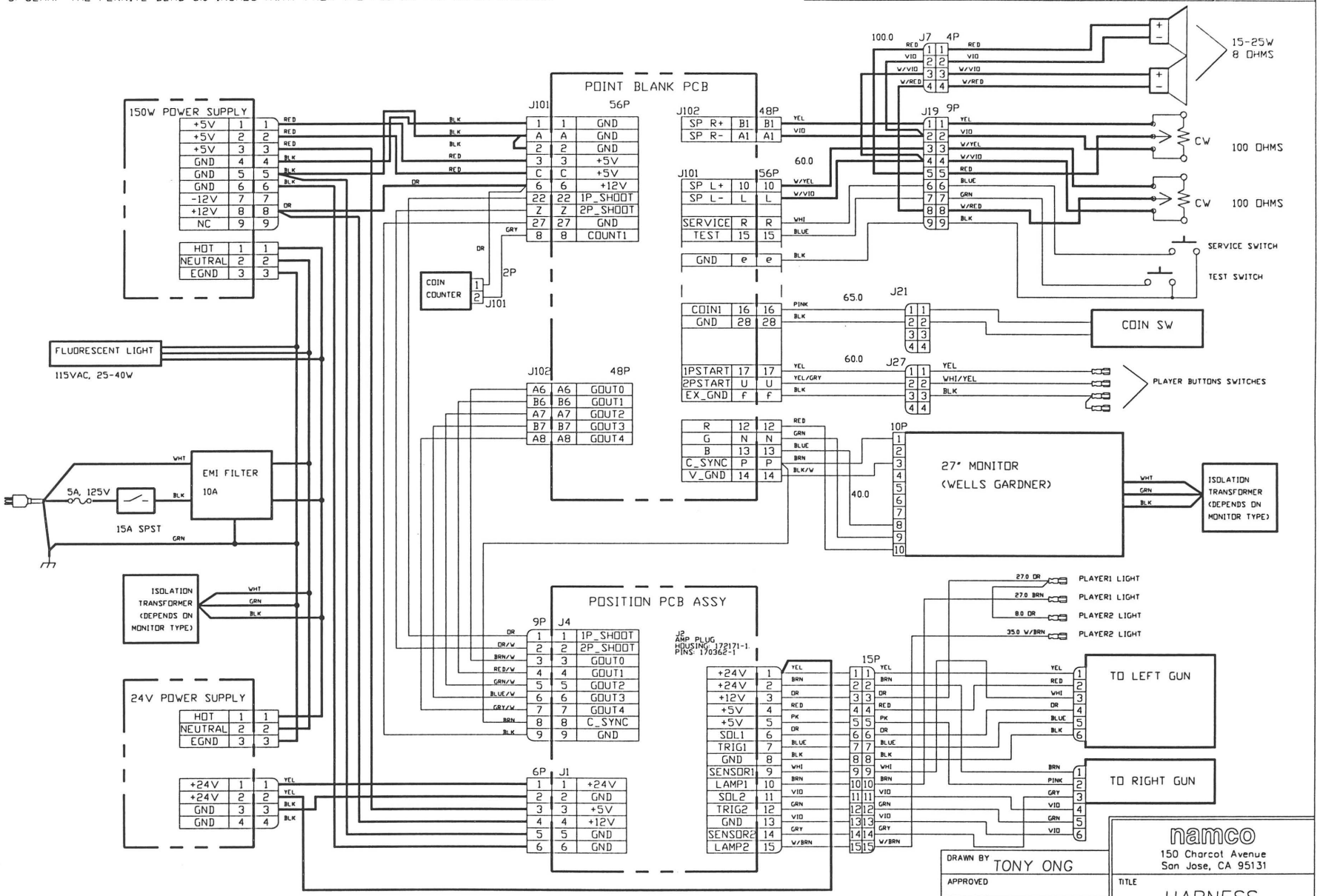

DRAWN BY	TONY ONG
APPROVED	
CHECKED	DATE 9/94
TOLERANCES UNLESS OTHERWISE SPECIFIED:	
X.XX ± 0.01	ANGLES ± 1°
X.XXX ± 0.005	
USED ON	POINT BLANK

namco
150 Charcot Avenue
San Jose, CA 95131

TITLE
HARNESS, OVERALL

SIZE	DRAWING NO.	REV
C	PB50-05168-00	B

DO NOT SCALE | SHT 1 OF 1

WARRANTY

Seller warrants that its printed circuit boards and parts thereon are free from defects in materials and workmanship under normal use and service for a period of ninety (90) days from the date of shipment. Seller warrants that its video displays (in games supplied with video displays) are free from defects in material and workmanship under normal use and service for a period of thirty (30) days from the date of shipment. None of the Seller's other products or parts thereof are warranted. Seller's sole liability shall be, at its option, to repair, replace, or credit Buyer's account for such products which are returned to Seller during said warranty period, provided:

a) Seller is promptly notified in writing upon discovery by Buyer that said products are defective.

b) Such products are returned prepaid to Seller's plant; and

c) Seller's examination of said products discloses to Seller's satisfaction that such alleged defects existed and were not caused by accident, misuse, neglect, alteration, improper repair, improper installation, or improper testing.

In no event shall Seller be liable for loss of profits. loss of use, incidental or consequential damages.

Except for any express warranty set forth in a written contract between Seller and Buyer which contract supersedes the terms herein, this warranty is in lieu of all other warranties expressed or implied, including the implied warranties of merchantability and fitness for a particular purpose, and all other obligations or liabilities on the Seller's part, and it neither assumes nor authorizes any other person to assume for the Seller any other liabilities in connection with the sale of products by Seller.

Namco America Inc. distributors are independent, being privately owned and operated. In their judgment they may sell parts or accessories other than **Namco America Inc.** parts or accessories. **Namco America Inc.** cannot be responsible for the quality, suitability or safety of any non-**Namco America Inc.** part or any modification including labor which is performed by such distributor.

SERVICE

If you have questions regarding any **Namco America Inc.** product or require technical support:

Contact **Namco America Inc.** Customer Service at:

1 (800) 326-4263 or FAX (408) 232-3060

Hours: 8:00 am - 4:00 pm PDT

Parts and repair services for **Namco America Inc.** products are available through your distributor.

NAMCO AMERICA INC.
150 Charcot Ave.
San Jose, CA 95131
(408) 383-3900
FAX: (408) 383-0128
Technical Assistance (USA)
(800) 326-4263 Fax: (408) 232-3060

Reorder Number PB45-03347-00
REV. B